Syntactic Processing of Diagrams by NCE Graph Grammars

有田　友和,　○冨山　聖宣,　夜久　竹夫
日本大学

宮寺　庸造,
東京学芸大学

杉田　公夫,
東海大学

土田　賢省
東洋大学

Abstract

- **TARGET:** Diagrams in Software Specification

Diagrams		Corresponding Graphs	Universal Models
Hierarchical Diagram	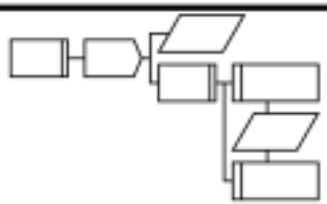	Attribute Tree	Attribute NCE CFGG
Nested Diagram	Program Code: / Program Name: / Library Code: / **Program Specification** / Version:	Attribute Marked Tree	Attribute NCE CFGG
Tessellation Diagram	Name: x, Type: int, Size: 2, G/L: G Name: y, Type: float, Size: 4, G/L: L	Attribute Marked Tessellation Graph	Attribute NCE CSGG

- **GOAL:** Syntactic Processing

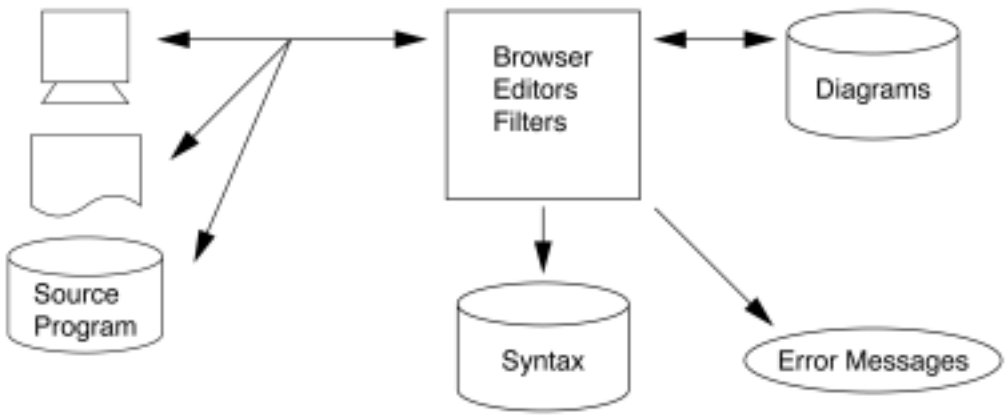

1 Introduction

Background

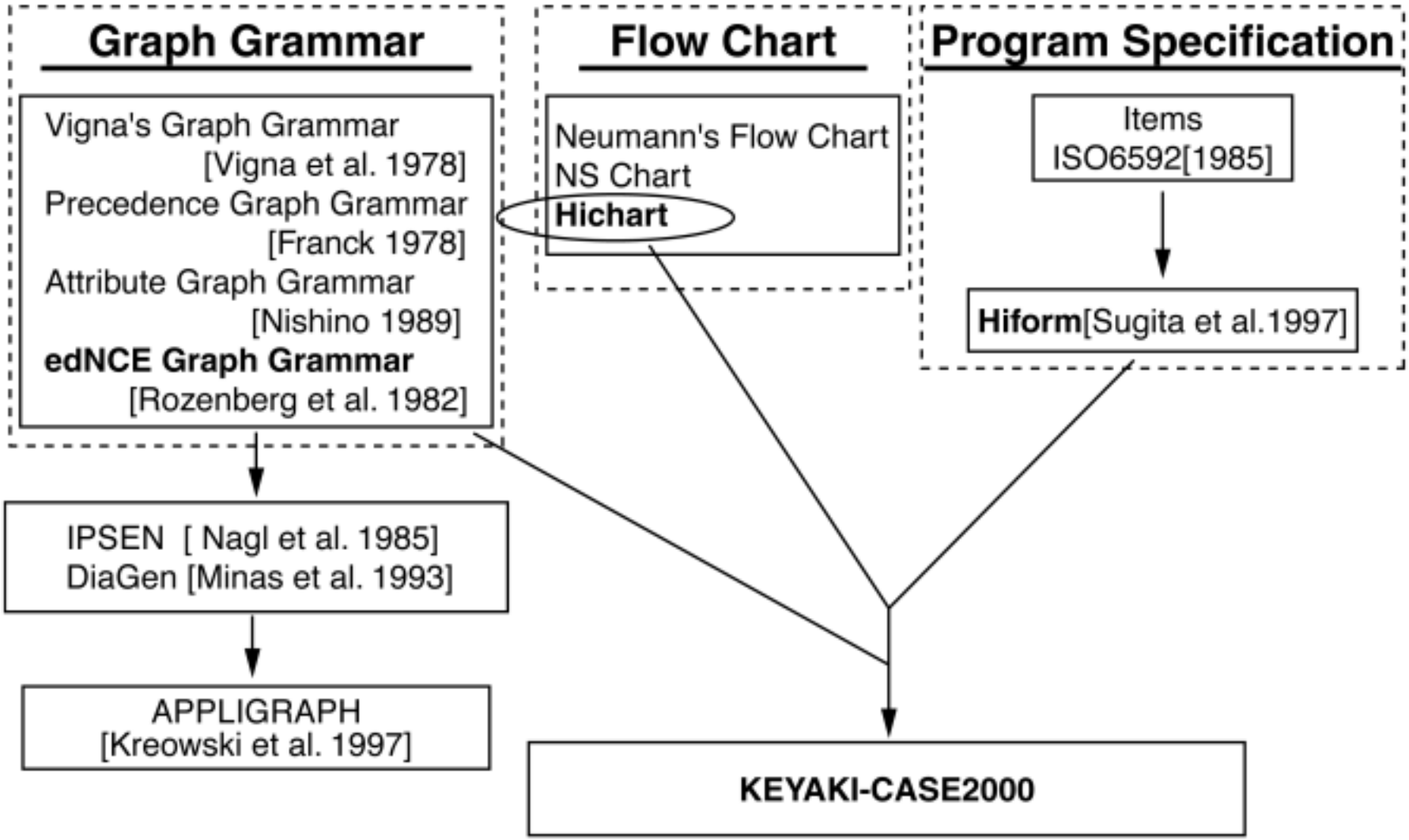

Related Works

Project Name	Program Semantics by GG	Drawing by Combinatorial Algorithm	Drawing by AGG	Syntax by Graph Grammar
IPSEN	○	—	—	○
DiaGen	—	○	—	○
KEYAKI-CASE2000	—	○	○	○

Related Works (continued)

Diagrams	Known Models	
Flowchart 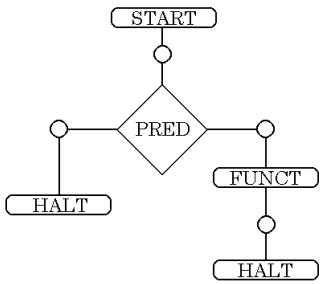	CF PLEX Grammar	K.S.Fu (1982)
	Relational Grammar	K.Wittenburg Et al.(1991)
Data Flow Chart 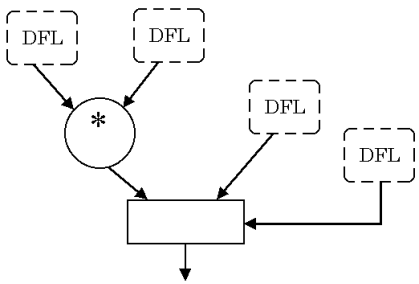	Positional Grammar	G. Costagliola et al. (1990)
Structured Flow Chart 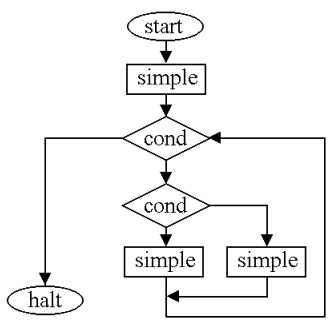	Symbol Relation Grammar	F.Ferruci et al. (1996)

Motivation

- Formalism of diagram’s structure and layout information
- Formalism of diagram processing method

Results

- Types of graph grammars

Graph Grammar	Grammar's type (Rewriting rule, Attribute rule)	Diagram
HCGG	*Context-free* (67, 723)	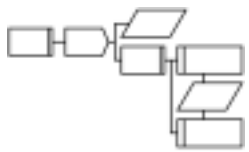
HNGG	*Context-free, precedence* (280, 1248)	
HTGG	*Context-sensitive* (69, 308)	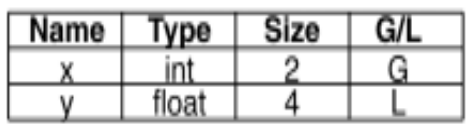

Name	Type	Size	G/L
x	int	2	G
y	float	4	L

- Integrated processing methods of diagrams

Diagram Processing System **KEYAKI-CASE2000**

Contents

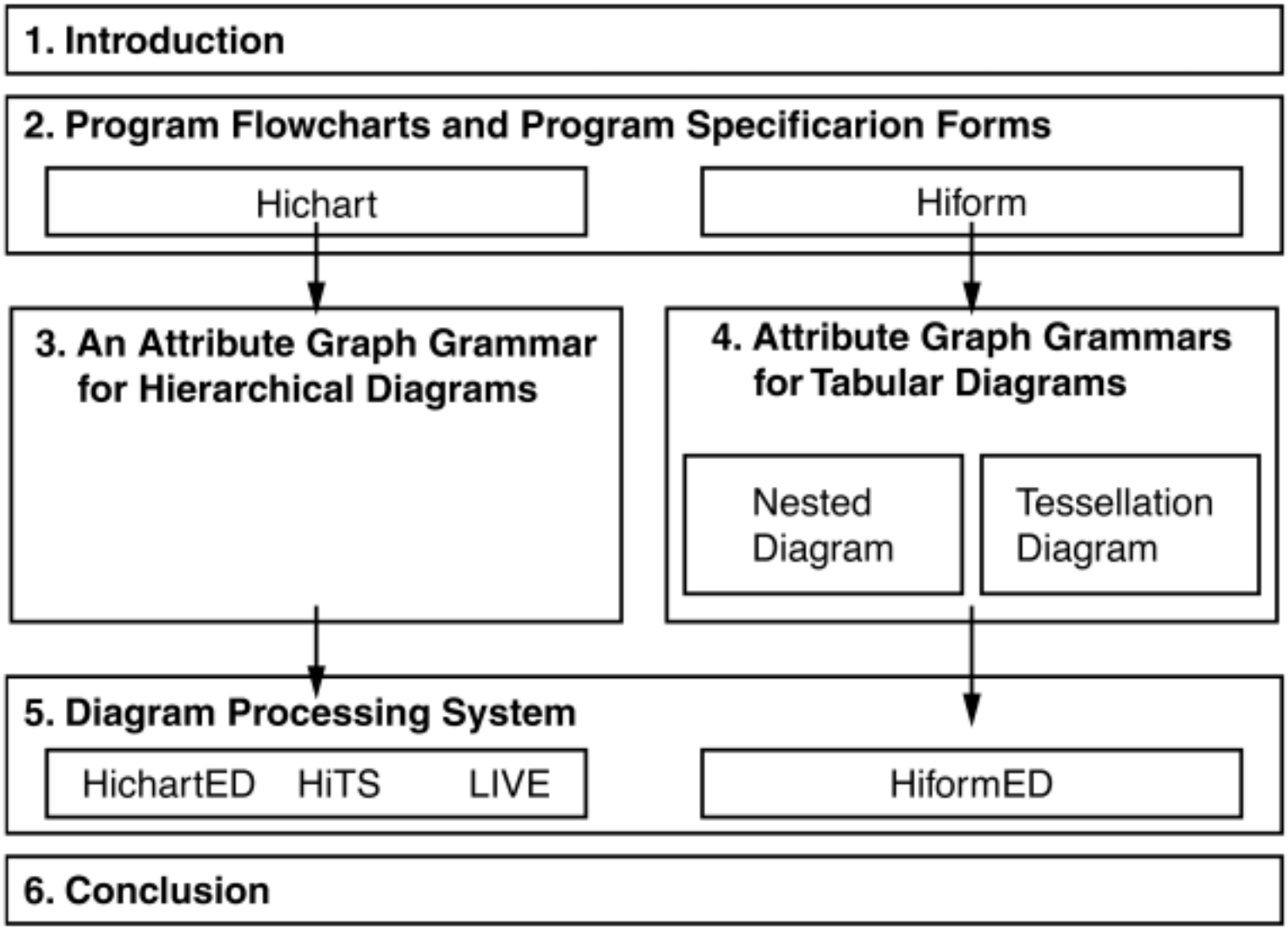
1. Introduction
2. Program Flowcharts and Program Specificarion Forms
Hichart
Hiform
3. An Attribute Graph Grammar for Hierarchical Diagrams
4. Attribute Graph Grammars for Tabular Diagrams
Nested Diagram
Tessellation Diagram
5. Diagram Processing System
HichartED HiTS LIVE
HiformED
6. Conclusion

2. Program Flowcharts and Program Specification Forms

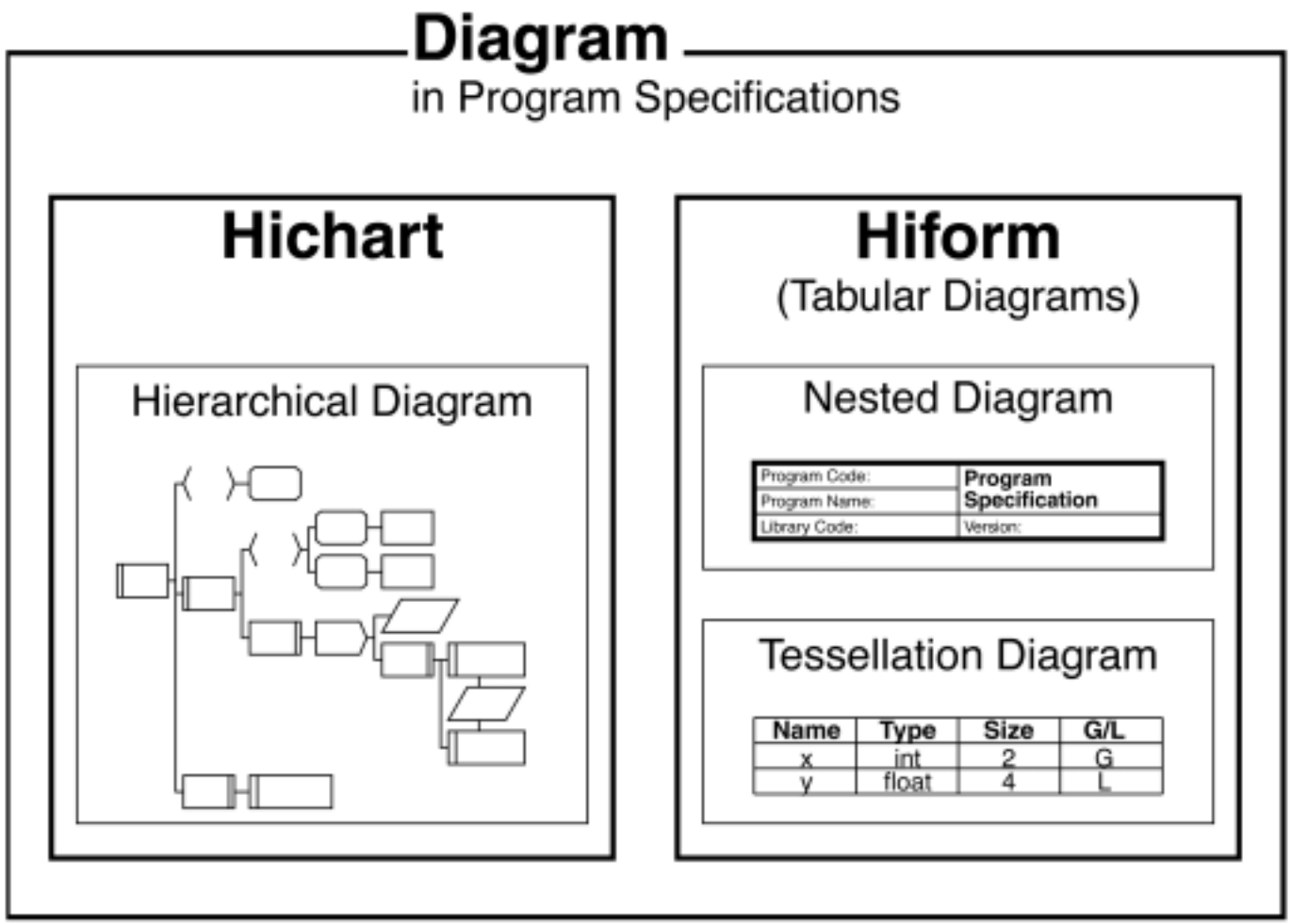

2.1 Hierarchical Diagram for Program Flowchart

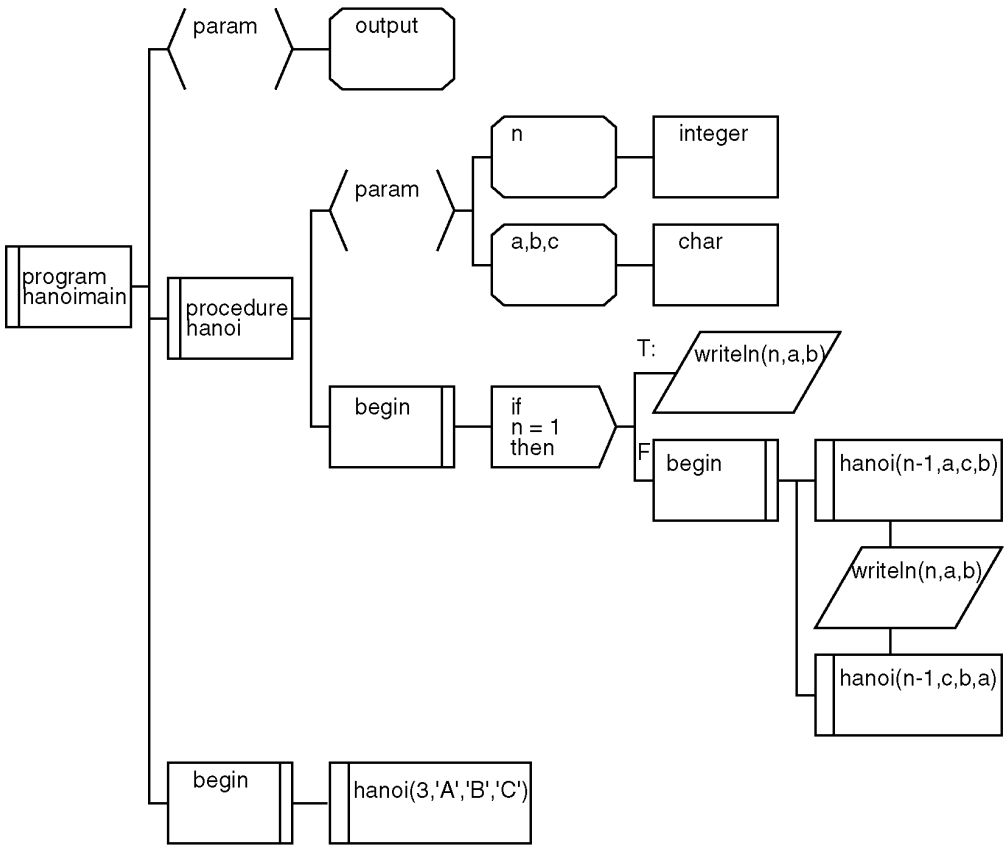

A Hichart program flowchart (Tower of Hanoi).

2.2 Tabular Diagrams for Program Specification Forms

Hiform

(a program specification language)

- 17types of Forms based on ISO6592
- A collection of tabular forms

Project Code:	A 5
Program Name:	**Program Specification-1** p
Library Code:	Version:
Author:	Original Release:
Approver:	Current Release:
Problem Description:	
Problem Supplementary Information (Theoretical Principles, Methods and References):	
Problem Solution: 1.Conventions and Terminology 2.Principles and Algorithms	

3. An Attribute Graph Grammar for Hierarchical Diagrams

Attribute Context-sensitive NCE (Neighborhood Controlled Embedding) Graph Grammar [Rozenberg et al. 1982]

Derivation :

G1:

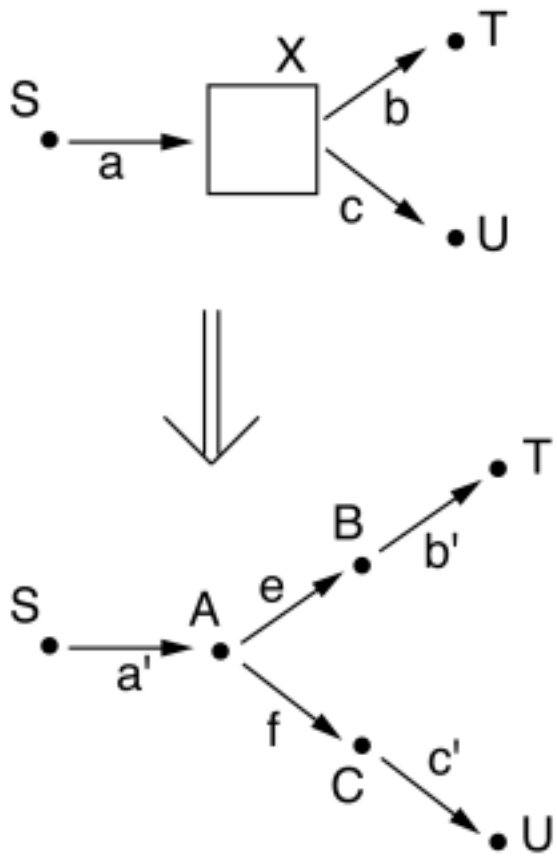

G2:

Rewriting Rule:

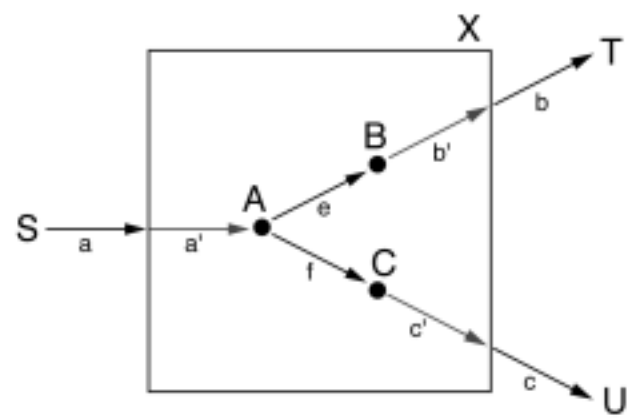

Attribute Context-free NCE Graph Grammar

Production with attribute rules:

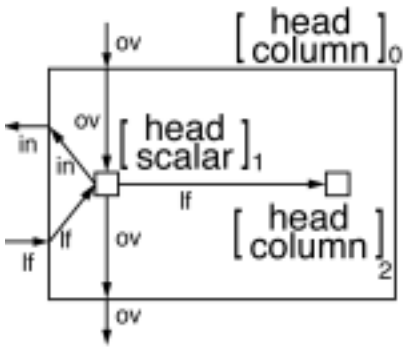

Semantic Rule

x(1) = x(0)
x(2) = x(0)+width(1)
y(1) = y(0)
y(2) = y(0)

width(0) = width(1)+width(2)
height(0) = max(height(1), height(2))

Attribute rule evaluation in CF NCE GG :

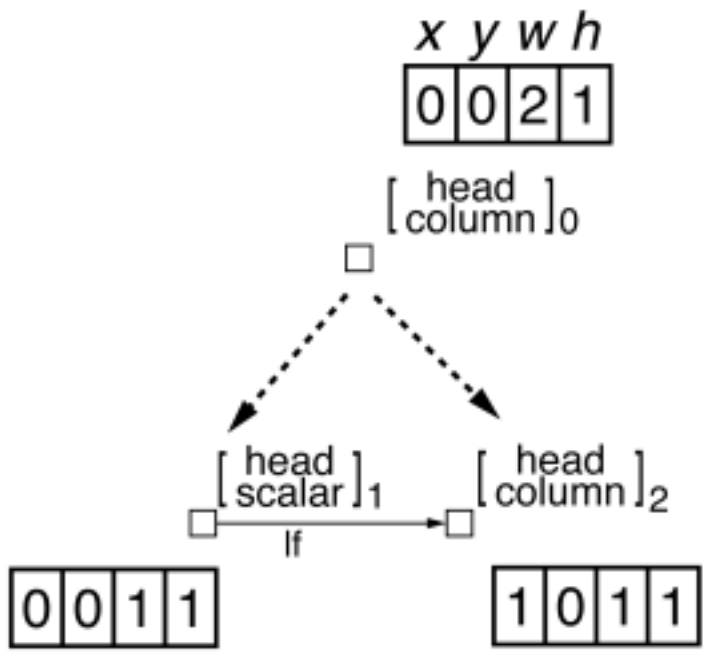

Grammar 3.1 HCGG

HCGG (HiChart Graph Grammar) is an attribute context-free NCE graph grammar for hierarchical diagrams in Hichart such as :

Production Example of HCGG

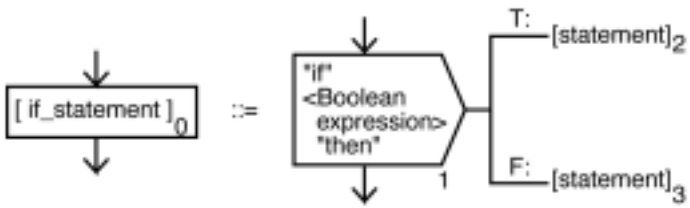

if_statement(1)

Production

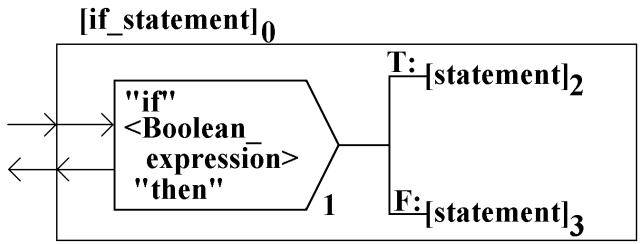

Semantic Rules

top(2)=top(0)	cl(2)="T:"
top(3)=bottom(2)+GapY	cl(3)="F:"
x(1)=x(0)	id(1)=id(0)
x(2)=x(0)+w(1)+GapX	id(2)=id(1)+1
x(3)=x(0)+w(1)+GapX	id(3)=id(2)+nc(2)
y(0)=(y(2)+y(3))/2	nc(0)=1+nc(2)+nc(3)

bottom(0)=max(bottom(1),bottom(3))

w(1)=MinW

h(1)=get_height(["if",<Boolean_expression>,"then"])

cell(1)="exclusive_selection"

string(1)=get_str(["if",<Boolean_expression>,"then"])

lines(1)=get_line(1,[2,3])

Features of HCGG

GG	Type	Rewriting Rule	Attribute Rule
HCGG	Context-free	67	723

- **Property 3.2**

Attribute rules in HCGG are evaluated in <u>linear time</u>.

3.2 Attribute Graph Grammars for Tabular Diagrams

- **Nested Diagram and Its Corresponding Marked Graph**

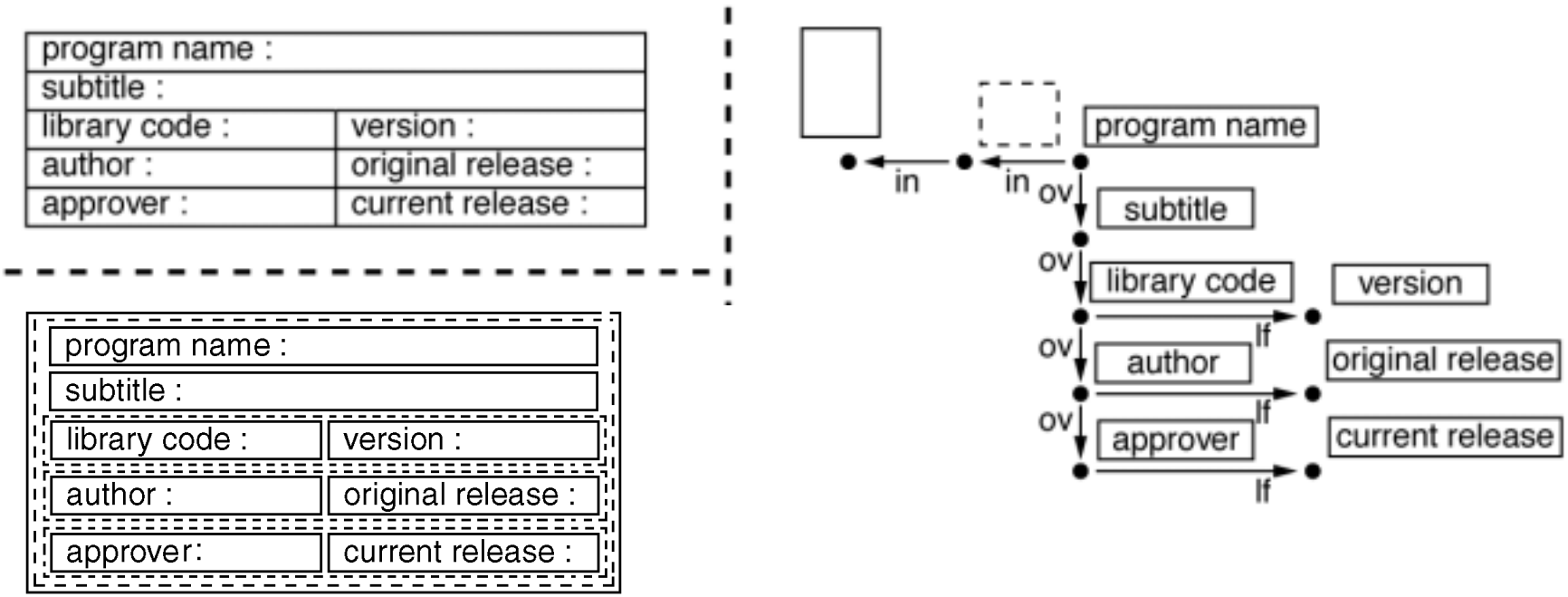

Grammar 4.1 HNGG

HNGG (Hiform Nested Graph Grammar) is an attribute context-free NCE graph grammar for the nested diagrams such as:

Production Examples of HNGG

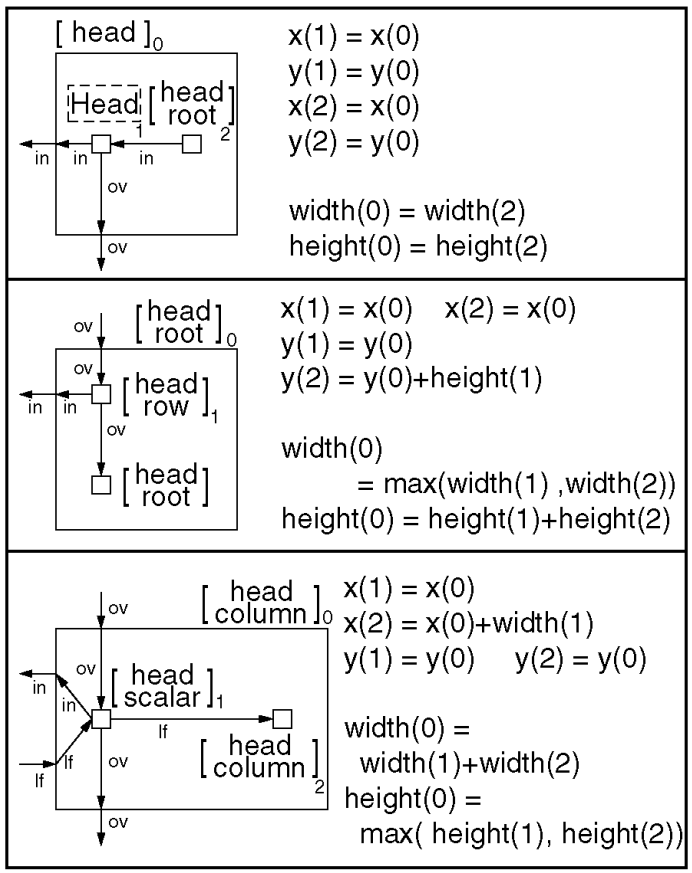

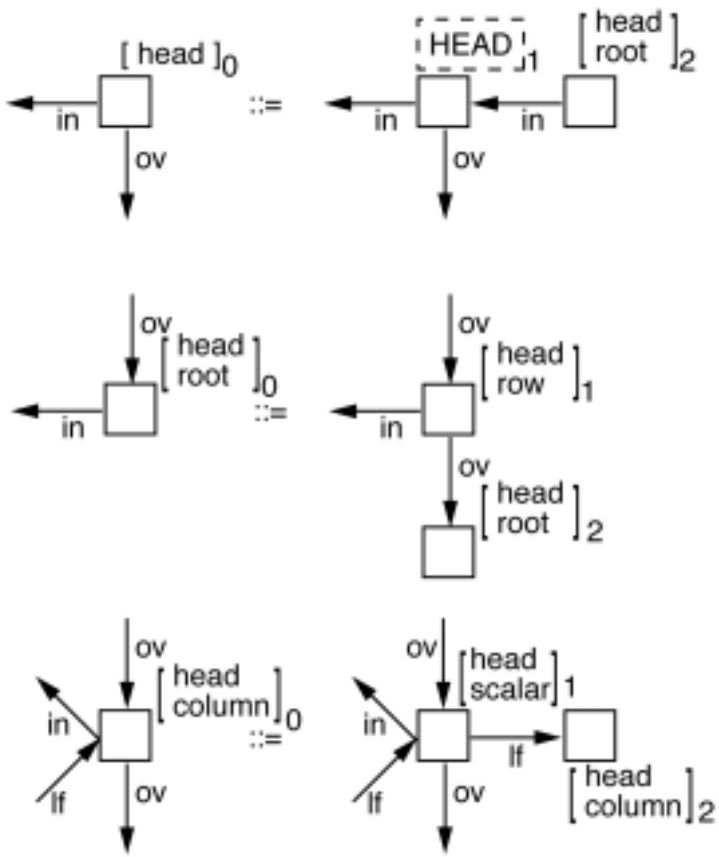

Features of HNGG

GG	Type	Rewriting Rule	Attribute Rule
HNGG	Context-free	280	1248

- **Property 4.2**

HNGG is a **precedence graph grammar** (see e.g. Franck 1978).

Tessellation Diagram and Its Corresponding Graph

Name	Type	Size	G/L
x	int	2	G
y	float	4	L

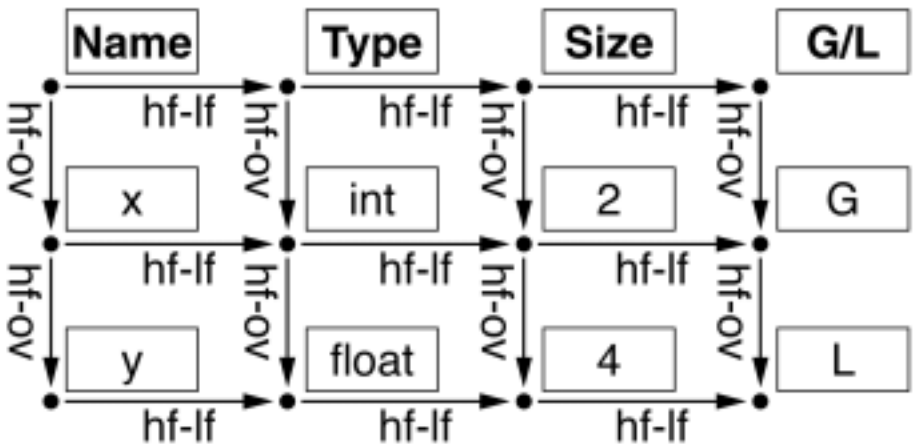

Grammar 4.3 HTGG

HTGG (Hiform Tessellation Graph Grammar) is an attribute context-sensitive NCE graph grammar for the tessellation diagrams such as:

Production Example of HTGG

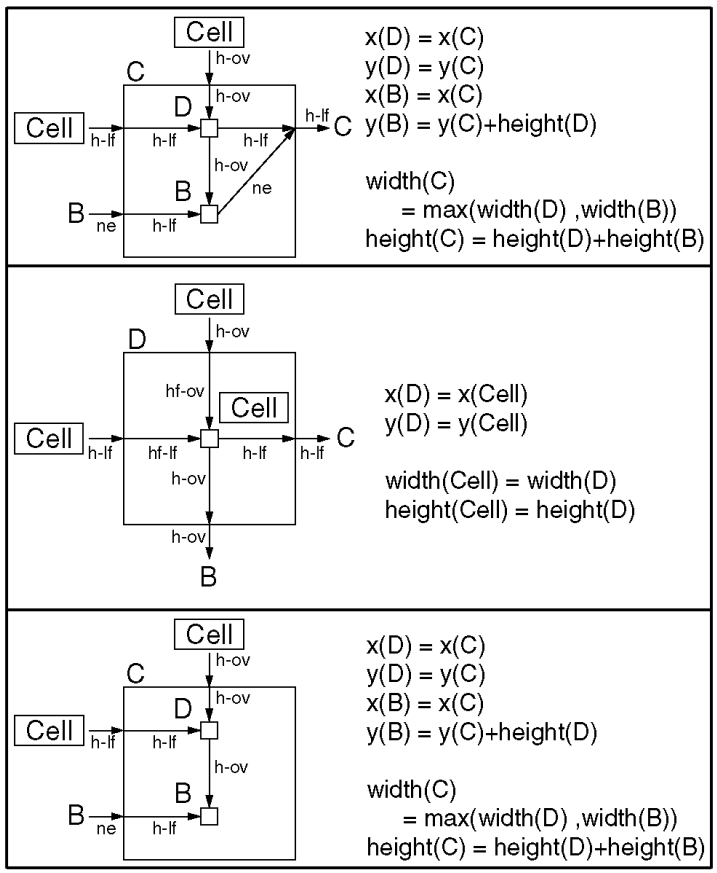

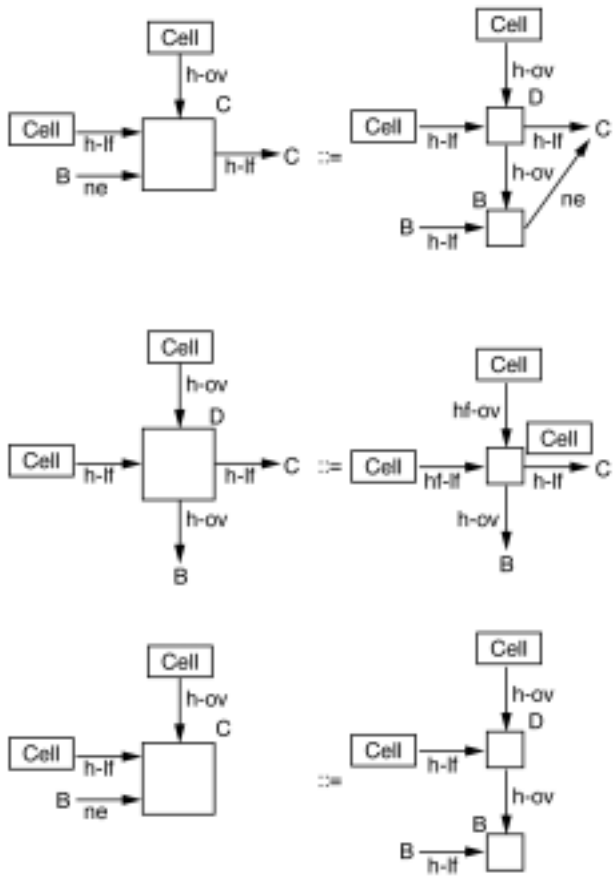

Features of HTGG

GG	Type	Rewriting Rule	Attribute Rule
HTGG	Context-sensitive	69	308

5. Diagram Processing System

KEYAKI – CASE2000 Concept

1. **HichartED**

   Hichart program diagram editing component

2. **HiTS**

   Hichart program diagram filtering component

3. **LIVE**

   Program variable analyzing component

4. **HiformED**

   Hiform diagram component

KEYAKI-CASE2000 Inside

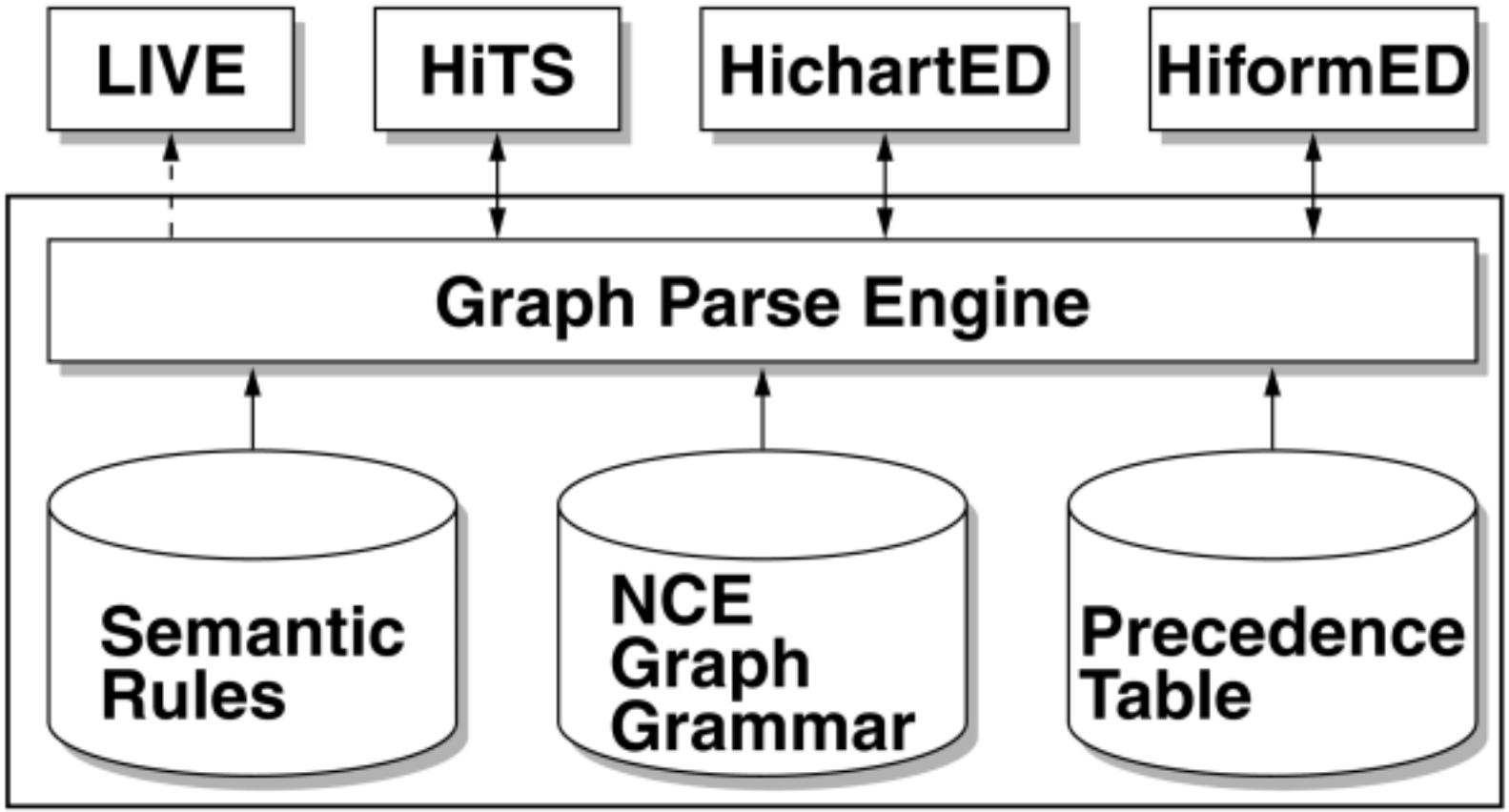

Screen Concept of HichartED

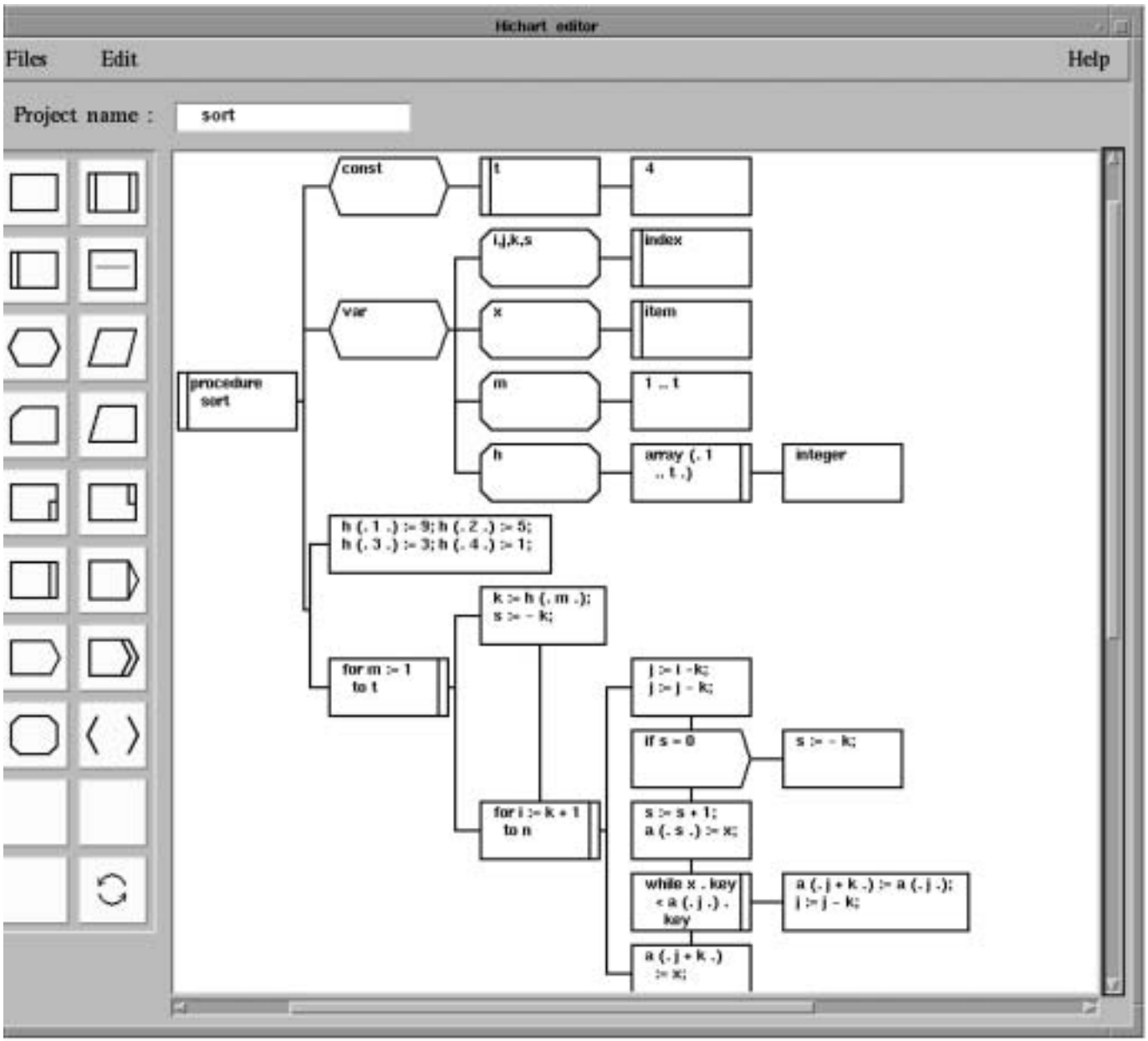

Execution Screen in HiTS

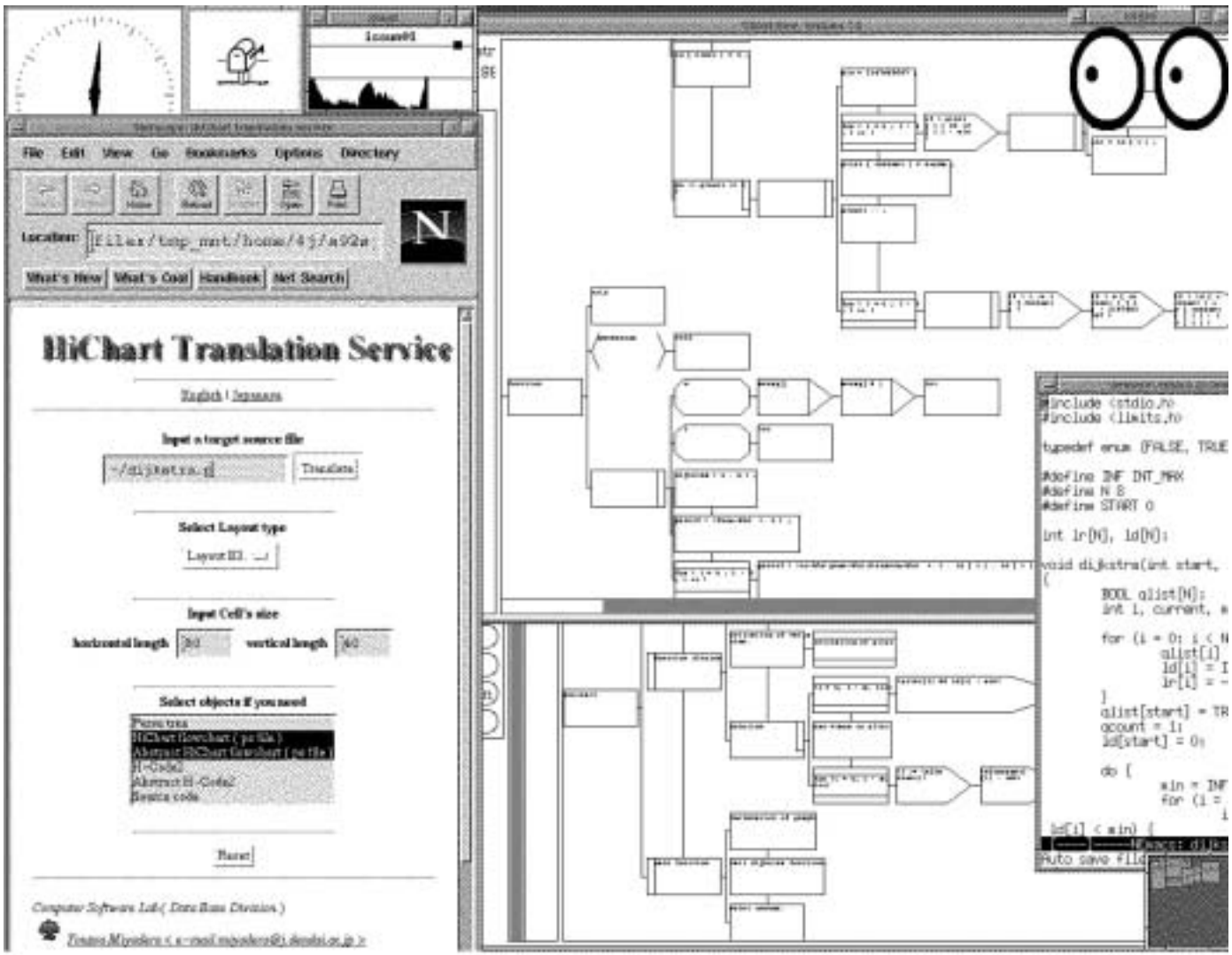

Execution Screen in LIVE

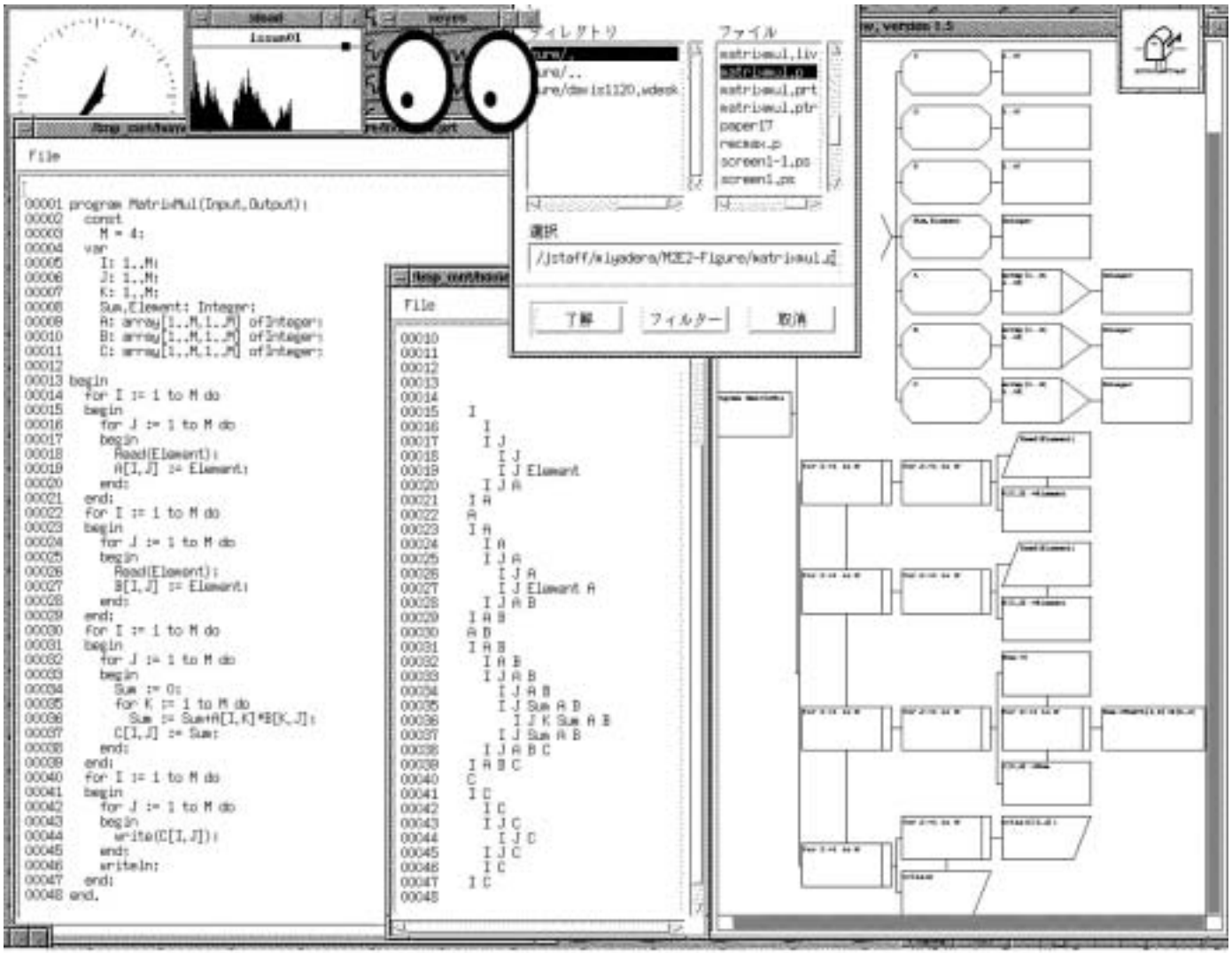

Screen Concept of HiformED

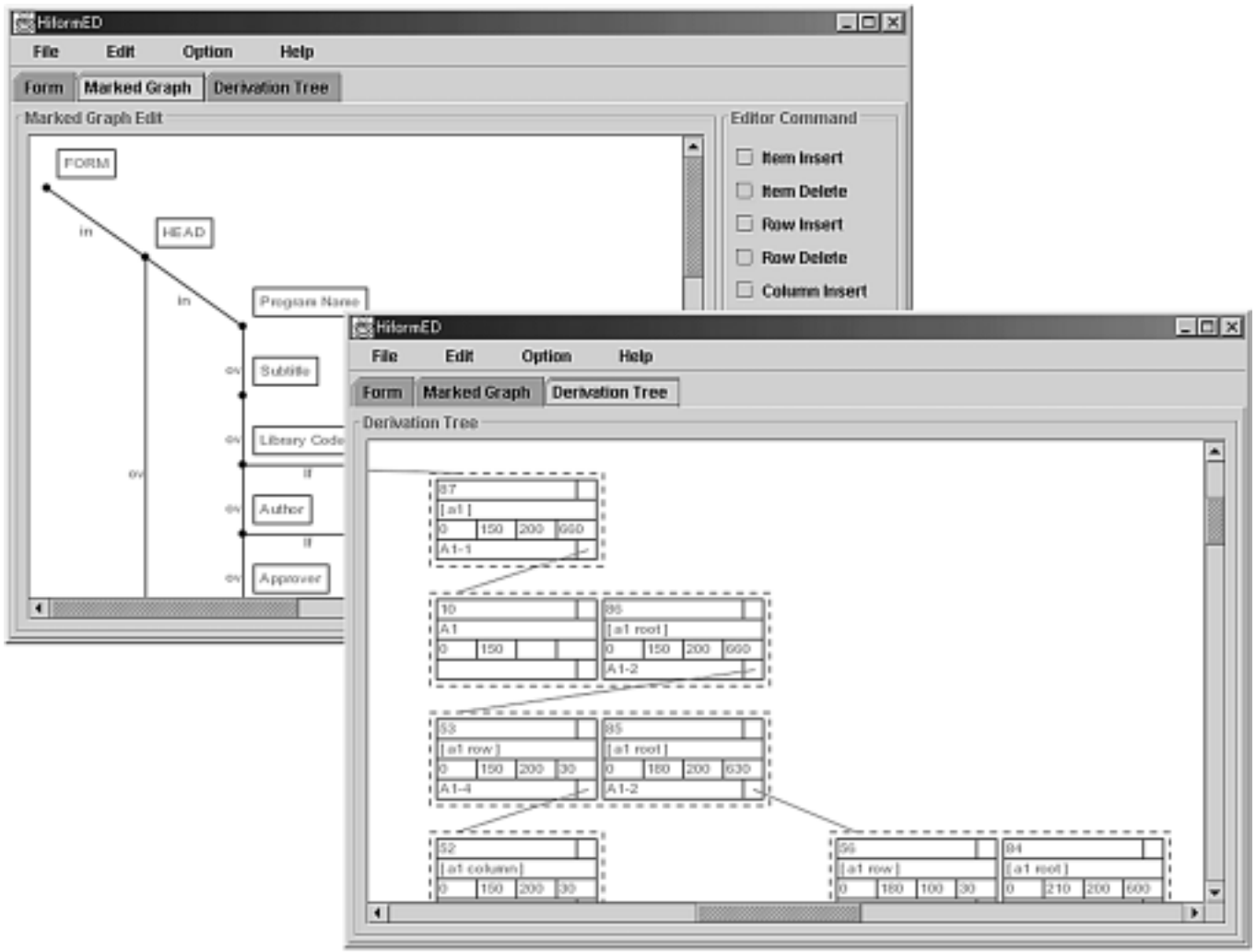

6. Conclusion

System	NCE GG	System with NCE GG	System without NCE GG
HichartED	△	△	○
HiTS	○	Not yet	○
LIVE	Not yet	Not yet	○
HiformED	△	Not yet	△

Our Project Web Site :

Including detailed description of Graph Grammars

- **URL:**

  http://www.hichart.org/